AEC 26482 Series I

CONNECTORS

Table of Contents

	page
Ordering Information	26
Technical Specifications	27
Mounting Dimensions	28

Contact and Insert Arrangements

Insert Arrangement & Alternate Positioning	29
Contact Arrangement	30

AEC 26482 I Series

Wall Mounting Receptacle (AEC3110)	32
Cable Connecting Plug (AEC3111)	34
Box Mounting Receptacle (AEC3112)	36
Box Mounting Receptacle for Rear Panel Mounting (AEC3112EP)	36
Box Mounting Receptacle with PCB Contacts (AEC3112PC)	37
Jam Nut Receptacle with PCB Contacts (AEC3114PC)	37
Jam Nut Receptacle (AEC3114)	38
Straight Plug (AEC3116)	40
Dummy Stowage Receptacle (AEC3115)	42
Thru-Bulkhead Receptacle (AEC3119)	42

AEC 26482 Series I Accessories

Protective Cover for Receptacle (AEC3181)	43
Protective Cover for Plug (AEC3180)	43

This Connector Guide is intended to provide general information about various products. Information contained herein is for general reference only and subject to change without notice. Products may deviate from the listed description, specifications, technical data, dimensions and illustrations provided in this Connector Guide. Please contact Amerline to discuss your specific application to ensure that the desired products meet your specific requirements. No information or data contained in this Connector Guide shall be construed to create any liability on the part of Amerline.

AEC1243-SM-CTLG-2 Rev. 0, 5-8-23

Ordering Information

AEC	3116	E	14	-	15	P	Y	BR
AEC Prefix	Shell Style	Service Class	Shell Size		Insert Arrangement	Contact Style	Alternate Insert Position	Finish

Shell Size: 8, 10, 12, 14, 16, 18, 20, 22 and 24

Insert Arrangement: See Insert Arrangement

Contact Style:
P = Pin
S = Socket

Alternate Insert Position:
W, X, Y, Z
See Alternate Positioning

Service Class:
A = General Duty
E = Grommet Seal
F = Grommet Seal with Strain Relief
P = Potting Seal
PC = PCB contacts (AEC 3112, AEC 3114 only)

Finish:
Blank - Olive Drab over Cadmium (default)
BLK- Black Zinc
BR - Electro-deposited Black (RoHS), 500hrs salt spray test
BZR - Black Zinc RoHS (Black trivalent chromate over zinc plating)
EN - Electroless Nickel (RoHS)
N- Nickel (RoHS)
OR - Electro-deposited Olive Drab (RoHS), 500hrs salt spray test

AEC Prefix:
3100 = Wall Mount Receptacle **3111** = Cable Connecting Plug
3112 = Box Mount Receptacle (Class "E" Only) **3114** = Jam Nut Receptacle
3115 = Dummy Stowage Receptacle **3116** = Straight Plug
3119 = Thru-Bulkhead Receptacle (Class "E" Only)

Customization / Modification requirements: Please contact Amerline.

Typical Mating Guide

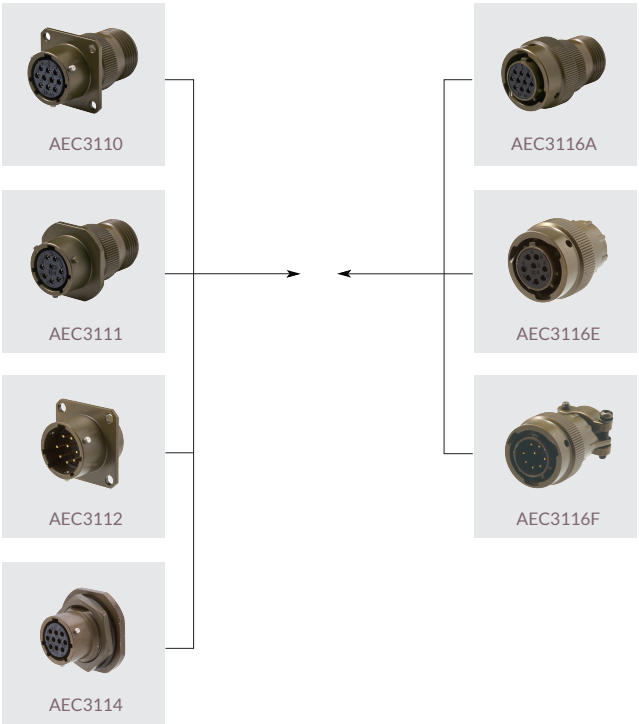

Products may deviate from the listed description, specifications, technical data, dimensions and illustrations provided in this Connector Guide. Please contact Amerline to discuss your specific application to ensure that the desired products meet your specific requirements.

[Materials & Finishes]

Shell, Endbell Aluminum alloy Olive drab chromate coating over cadmium plating
(Refer to Ordering Information page 26 for alternative finish options)
Insulator Synthetic rubber
Contact Copper alloy / Gold plating
Gasket and Grommet Synthetic rubber

[Electrical Data]

Operating Voltage
Test Voltage

Service Rating	Test Altitude	Maximum Operating DC	Maximum Operating AC (r. m. s)	Test Voltage DC	Test Voltage AC (r. m. s)
I	Sea Level	850	600	2,100	1,500
II	Sea Level	1,275	1,000	3,200	2,300
I	70,000 feet	-	300	535	375
II	70,000 feet	-	450	770	500

Current Rating

Contact Size	Rated Current (Amps)	Test Current (Amps)	Potential Drop (Millivolts)
20	7.5	7.5	<55
16	22.0	13.0	<50

Wire Range Size 24 to 16 AWG
Insulator Resistance Min. 5000 MΩ at 77°F (+25℃)

[Mechanical Data]

Operating Temperature -67°F (-55℃) to +257°F (+125℃)

Wire Range

Contact Size	AWG Wire Size	Insulation Outside Diameter Limit Min. Inches	Min. mm	Max. Inches	Max. mm
20	24,22 and 20	0.060	1.52	0.083	2.11
16	20,18 and 16	0.066	1.68	0.109	2.77

Durability 500 cycles of mating / unmating operations
Salt Spray 48 hours at environmental temperature (Cadmium Olive Drab plating)
500 hours at environmental temperature (Electro-deposited Olive Drab/Black RoHS plating)
Vibration 10 to 2000Hz (15g) 10 microseconds maximum discontinuity.
Shock 50g's, 11 ms duration, three major axes. 10 microseconds maximum discontinuity.
Contact Style Solder
Number of Contact 2 to 61

Contact Retention

Contact Size	Axial Load Min Newtons	Axial Load Min Lbs.
20	66.7	15
16	111.2	25

Products may deviate from the listed description, specifications, technical data, dimensions and illustrations provided in this Connector Guide. Please contact Amerline to discuss your specific application to ensure that the desired products meet your specific requirements.

Mounting Dimensions

[Panel Mounting Data]

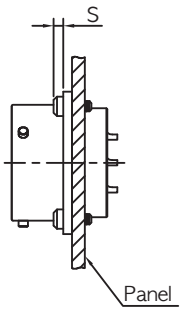

Front Panel Mounting

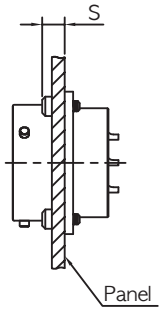

Rear Panel Mounting

Max. Panel & Screw Head

Shell Size	AEC3110	AEC3112	AEC3119
8	2.21	2.21	5.54
10	2.21	2.21	5.54
12	2.21	2.21	5.54
14	2.21	2.21	5.54
16	2.21	2.21	5.54
18	2.21	2.21	5.54
20	5.38	5.38	8.74
22	5.38	5.38	8.74
24	5.38	5.38	7.90

[Panel Cutout Dimensions]

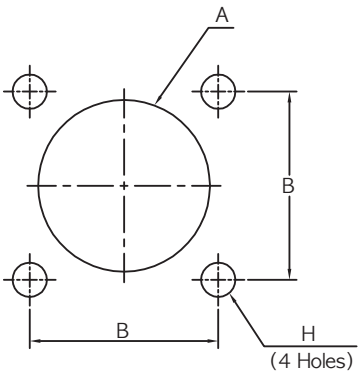

Box & Wall Mounting Receptacle

Shell Size	A dia. +0.25 / -0.00	B(TP)	H dia. ±0.13
8	15.70	15.09	3.18
10	18.67	18.26	3.18
12	21.82	20.26	3.18
14	25.02	23.01	3.18
16	28.27	24.61	3.18
18	31.37	26.97	3.18
20	34.57	29.43	3.18
22	37.72	31.75	3.18
24	40.92	34.93	3.94

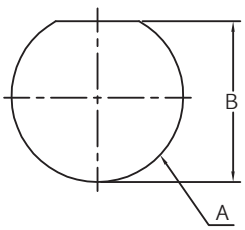

Jam Nut Receptacle

Shell Size	A dia. +0.25 / -0.00	B +0.00 / -0.25
8	14.68	13.8
10	17.7	17.0
12	22.5	21.1
14	25.6	24.3
16	28.8	27.5
18	32.0	30.7
20	35.2	33.9
22	38.3	37.1
24	41.5	40.4

Products may deviate from the listed description, specifications, technical data, dimensions and illustrations provided in this Connector Guide. Please contact Amerline to discuss your specific application to ensure that the desired products meet your specific requirements.

Insert Arrangement & Alternate Positioning

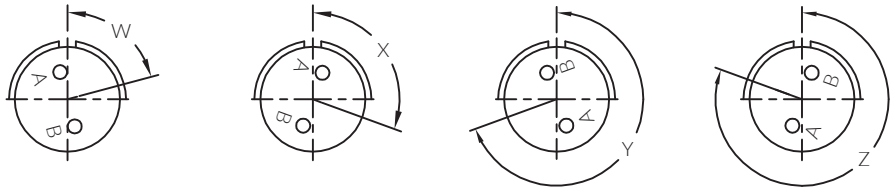

Position W Position X Position Y Position Z

View shows front face of pin insert or rear of socket insert

Shell Size	Insert Number	Service Rating	Total Contacts	Contact Size			Alternate Position Degrees			
				20	16	12	W	X	Y	X
8	8-2	I	2	2			58	122	-	-
	8-3	I	3	3			62	210	-	-
	8-4	I	4	4			45	-	-	-
	8-33	I	3	3			90	-	-	-
	8-98	I	3	3			60	-	-	-
10	10-6	I	6	6			90	-	-	-
	10-7	I	7	7			-	-	-	-
	10-98	I	6	6			90	180	240	270
12	12-3	II	3		3		-	-	180	-
	12-8	I	8	8			90	112	203	292
	12-10	I	10	10			60	155	270	295
	12-12	I	12	12			-	-	-	-
	12-14	I	14	14			-	-	-	-
14	14-5	II	5		5		40	92	184	273
	14-12	I	12	8	4		43	90	-	-
	14-15	I	15	14	1		17	110	155	234
	14-18	I	18	18			15	90	180	270
	14-19	I	19	19			30	165	345	-

Shell Size	Insert Number	Service Rating	Total Contacts	Contact Size			Alternate Position Degrees			
				20	16	12	W	X	Y	X
16	16-8	II	8		8		54	152	180	331
	16-23	I	23	22	1		158	270	-	-
	16-26	I	26	26			60	-	275	338
18	18-11	II	11		11		62	119	241	340
	18-30	I	30	29	1		180	193	285	350
	18-32	I	32	32			85	138	222	265
20	20-16	II	16		16		238	318	333	347
	20-24	I	24	24			70	145	215	290
	20-27	I	27	27			72	144	216	288
	20-39	I	39	37	2		83	144	252	333
	20-41	I	41	41			45	126	225	-
22	22-21	II	21		21		16	135	175	349
	22-32	I	32	32			72	145	215	288
	22-34	I	34	34			62	142	218	298
	22-41	I	41	27	14		39	135	264	-
	22-55	I	55	55			30	142	226	314
24	24-31	I	31		31		90	225	255	-
	24-61	I	61	61			90	180	270	324

Products may deviate from the listed description, specifications, technical data, dimensions and illustrations provided in this Connector Guide. Please contact Amerline to discuss your specific application to ensure that the desired products meet your specific requirements.

Contact Arrangement

Front face of pin insert or rear face of socket insert illustrated.

CONTACT LEGEND 20 16

Shell Size 8 / Shell Size 10

Insert Arrangement	8-2	8-3	8-4	8-33	10-6	10-7	10-98
Contact Size - No. of Contacts	#20-2	#20-3	#20-4	#20-3	#20-6	#20-7	#20-6
Service Rating	I	I	I	I	I	I	I

Shell Size 12

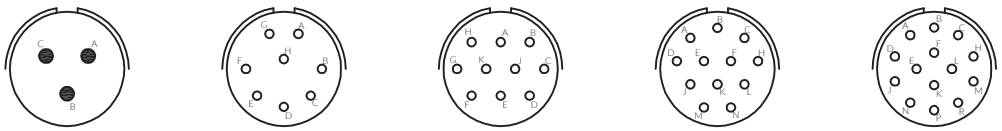

Insert Arrangement	12-3	12-8	12-10	12-12	12-14
Contact Size - No. of Contacts	#16-3	#20-8	#20-10	#20-12	#20-14
Service Rating	II	I	I	I	I

Shell Size 14

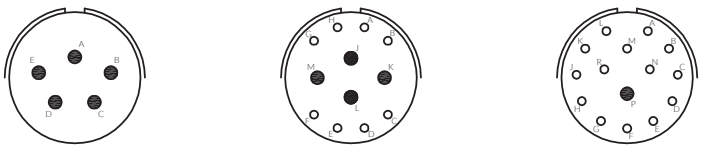

Insert Arrangement	14-5	14-12	14-15
Contact Size - No. of Contacts	#16-5	#20-8, # 16-4	#20-14, # 16-1
Service Rating	II	I	I

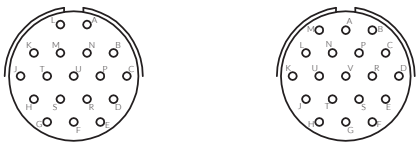

Insert Arrangement	14-18	14-19
Contact Size - No. of Contacts	#20-18	#20-19
Service Rating	I	I

Shell Size 16

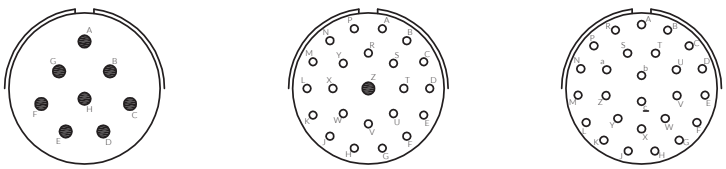

Insert Arrangement	16-8	16-23	16-26
Contact Size - No. of Contacts	#16-8	#20-22, # 16-1	#20-26
Service Rating	II	I	I

Products may deviate from the listed description, specifications, technical data, dimensions and illustrations provided in this Connector Guide. Please contact Amerline to discuss your specific application to ensure that the desired products meet your specific requirements.

Contact Arrangement

Front face of pin insert or rear face of socket insert illustrated.

CONTACT LEGEND	20	16

Shell Size 18

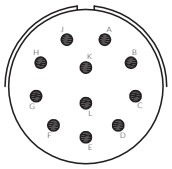
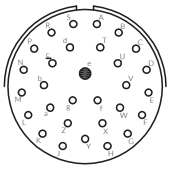
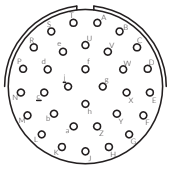

Insert Arrangement	18-11	18-30	18-32
Contact Size - No. of Contacts	#16-11	#20-29, #16-1	#18-32
Service Rating	II	I	I

Shell Size 20

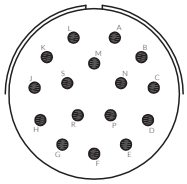
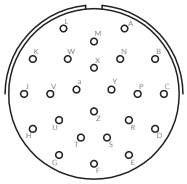
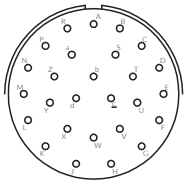
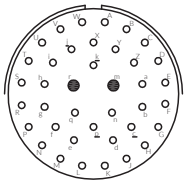

Insert Arrangement	20-16	20-24	20-27	20-39
Contact Size - No. of Contacts	#16-16	#20-24	#20-27	#20-37, #16-2
Service Rating	II	I	I	I

Shell Size 22

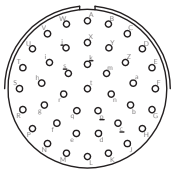
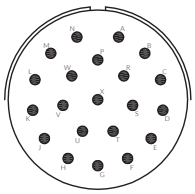
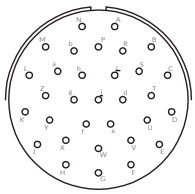
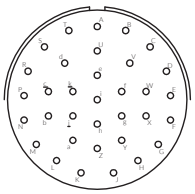

Insert Arrangement	20-41	22-21	22-32	22-34
Contact Size - No. of Contacts	#20-41	#16-21	#20-32	#20-34
Service Rating	I	II	I	I

Shell Size 24

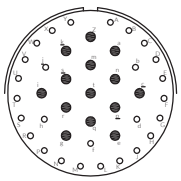
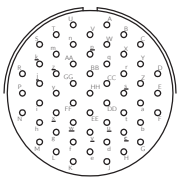
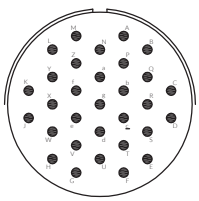
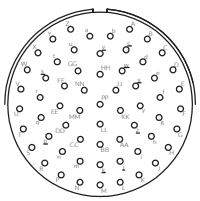

Insert Arrangement	22-41	22-55	24-31	24-61
Contact Size - No. of Contacts	#20-27, #16-14	#20-55	#16-31	#20-61
Service Rating	I	I	I	I

Products may deviate from the listed description, specifications, technical data, dimensions and illustrations provided in this Connector Guide. Please contact Amerline to discuss your specific application to ensure that the desired products meet your specific requirements.

AEC3110A Wall Mounting Receptacle

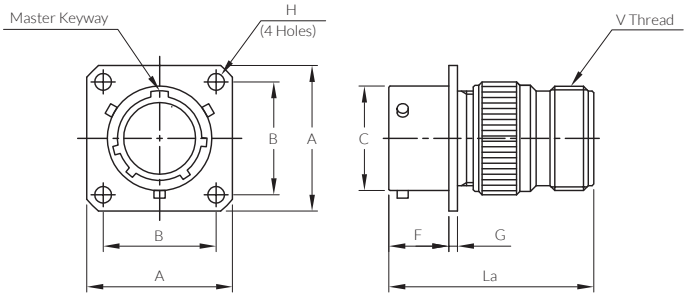

Unit : mm

Part No.	A max.	B ±0.13	C +0.03 -0.13	F +0.79 -0.00	G ±0.41	H +0.25 -0.13	La Ref.	V Thread Class 2A
AEC3110A 8	21.03	15.09	12.01	10.95	1.57	3.05	36.11	1/2-28 UNEF
AEC3110A 10	24.23	18.26	14.99	10.95	1.57	3.05	36.11	5/8-24 UNEF
AEC3110A 12	26.59	20.62	19.05	10.95	1.57	3.05	36.11	3/4-20 UNEF
AEC3110A 14	28.98	23.01	22.22	10.95	1.57	3.05	36.11	7/8-20 UNEF
AEC3110A 16	31.34	24.61	25.40	10.95	1.57	3.05	36.11	1-20 UNEF
AEC3110A 18	33.73	26.97	28.58	10.95	1.57	3.05	36.11	1 3/16-18 UNEF
AEC3110A 20	36.91	29.36	31.75	14.12	2.39	3.05	43.26	1 3/16-18 UNEF
AEC3110A 22	40.08	31.75	34.92	14.12	2.39	3.05	44.83	1 7/16-18 UNEF
AEC3110A 24	43.18	34.93	38.10	14.96	2.39	3.73	44.83	1 7/16-18 UNEF

AEC3110E Wall Mounting Receptacle

Grommet & Pressure Nut

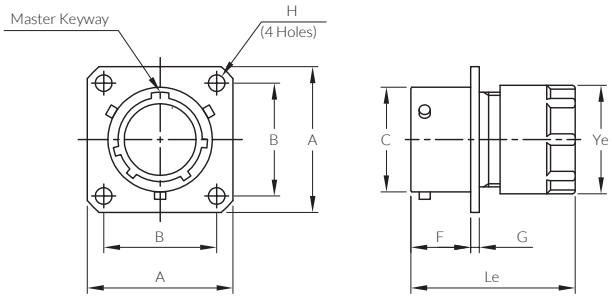

Unit : mm

Part No.	A max.	B ±0.13	C +0.03 -0.13	F +0.79 -0.00	G ±0.41	H +0.25 -0.13	La Ref.	Ye max.
AEC3110E 8	21.03	15.09	12.01	10.95	1.57	3.05	33.73	15.44
AEC3110E 10	24.23	18.26	14.99	10.95	1.57	3.05	33.73	18.64
AEC3110E 12	26.59	20.62	19.05	10.95	1.57	3.05	33.73	21.79
AEC3110E 14	28.98	23.01	22.22	10.95	1.57	3.05	33.73	24.99
AEC3110E 16	31.34	24.61	25.40	10.95	1.57	3.05	33.73	28.19
AEC3110E 18	33.73	26.97	28.58	10.95	1.57	3.05	33.73	31.34
AEC3110E 20	36.91	29.36	31.75	14.12	2.39	3.05	38.89	34.54
AEC3110E 22	40.08	31.75	34.92	14.12	2.39	3.05	38.89	37.69
AEC3110E 24	43.18	34.93	38.10	14.96	2.39	3.73	40.49	40.89

Products may deviate from the listed description, specifications, technical data, dimensions and illustrations provided in this Connector Guide. Please contact Amerline to discuss your specific application to ensure that the desired products meet your specific requirements.

AEC3110F Wall Mounting Receptacle

Integral Cable Clamp with Grommet

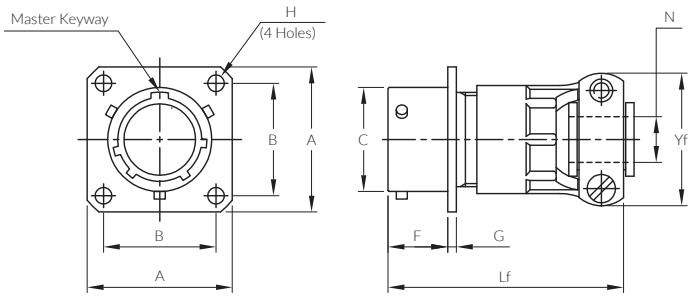

Unit : mm

Part No.	A max.	B ±0.13	C +0.03 -0.13	F +0.79 -0.00	G ±0.41	H +0.25 -0.13	Lf Ref.	N ±0.25	Yf max.
AEC3110F 8	21.03	15.09	12.01	10.95	1.57	3.05	48.82	3.18	21.03
AEC3110F 10	24.23	18.26	14.99	10.95	1.57	3.05	48.82	4.78	22.63
AEC3110F 12	26.59	20.62	19.05	10.95	1.57	3.05	48.82	7.92	25.81
AEC3110F 14	28.98	23.01	22.22	10.95	1.57	3.05	48.82	9.53	28.98
AEC3110F 16	31.34	24.61	25.40	10.95	1.57	3.05	51.99	12.70	30.56
AEC3110F 18	33.73	26.97	28.58	10.95	1.57	3.05	52.78	15.88	37.31
AEC3110F 20	36.91	29.36	31.75	14.12	2.39	3.05	59.54	15.88	37.31
AEC3110F 22	40.08	31.75	34.92	14.12	2.39	3.05	59.54	19.05	42.06
AEC3110F 24	43.18	34.93	38.10	14.96	2.39	3.73	61.11	20.32	44.45

AEC3110P Wall Mounting Receptacle

Potting Seal

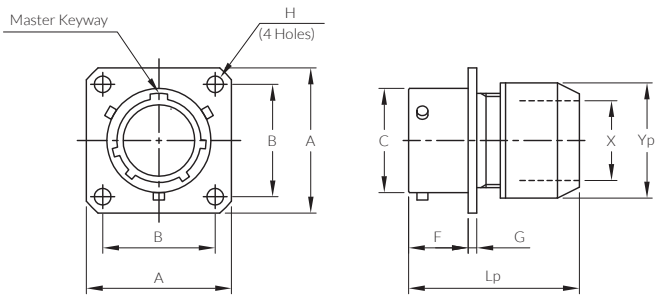

Unit : mm

Part No.	A max.	B ±0.13	C +0.03 -0.13	F +0.79 -0.00	G ±0.41	H +0.25 -0.13	Lp Ref.	X min.	Yp max.
AEC3110P 8	21.03	15.09	12.01	10.95	1.57	3.05	36.91	8.05	15.44
AEC3110P 10	24.23	18.26	14.99	10.95	1.57	3.05	36.91	11.02	18.64
AEC3110P 12	26.59	20.62	19.05	10.95	1.57	3.05	36.91	13.92	21.79
AEC3110P 14	28.98	23.01	22.22	10.95	1.57	3.05	36.91	17.09	24.99
AEC3110P 16	31.34	24.61	25.40	10.95	1.57	3.05	36.91	20.27	28.19
AEC3110P 18	33.73	26.97	28.58	10.95	1.57	3.05	36.91	22.83	31.34
AEC3110P 20	36.91	29.36	31.75	14.12	2.39	3.05	42.47	26.01	34.54
AEC3110P 22	40.08	31.75	34.92	14.12	2.39	3.05	42.47	29.18	37.69
AEC3110P 24	43.18	34.93	38.10	14.96	2.39	3.73	44.04	32.36	40.89

Products may deviate from the listed description, specifications, technical data, dimensions and illustrations provided in this Connector Guide. Please contact Amerline to discuss your specific application to ensure that the desired products meet your specific requirements.

AEC3111A Cable Connecting Plug

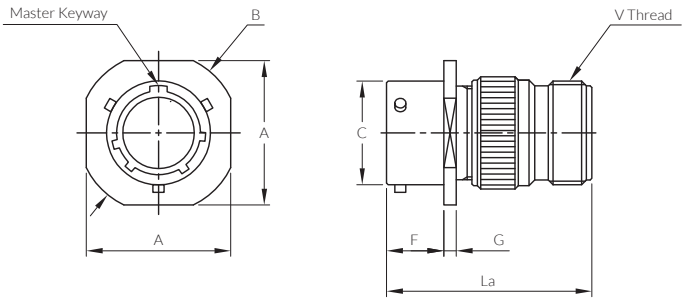

Unit : mm

Part No.	A max.	B ±0.51	C +0.03 -0.13	F +0.79 -0.00	G ±0.41	La Ref.	V Thread Class 2A
AEC3111A 8	21.03	23.83	12.01	10.16	2.39	36.11	1/2-28 UNEF
AEC3111A 10	24.23	26.97	14.99	10.16	2.39	36.11	5/8-24 UNEF
AEC3111A 12	26.59	29.36	19.05	10.16	2.39	36.11	3/4-20 UNEF
AEC3111A 14	28.98	31.75	22.22	10.16	2.39	36.11	7/8-20 UNEF
AEC3111A 16	31.34	34.14	25.40	10.16	2.39	36.11	1-20 UNEF
AEC3111A 18	33.73	36.53	28.58	10.16	2.39	36.11	1 3/16-18 UNEF
AEC3111A 20	36.91	39.67	31.75	13.59	2.92	43.26	1 3/16-18 UNEF
AEC3111A 22	40.08	42.88	34.92	13.59	2.92	44.83	1 7/16-18 UNEF
AEC3111A 24	43.18	46.02	38.10	14.17	2.92	44.83	1 7/16-18 UNEF

AEC3111E Cable Connecting Plug

Grommet & Pressure Nut

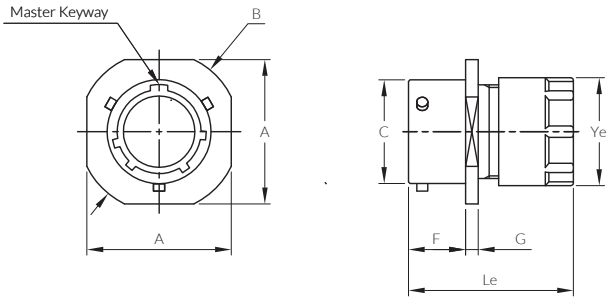

Unit : mm

Part No.	A max.	B ±0.51	C +0.03 -0.13	F +0.79 -0.00	G ±0.41	Le Ref.	Ye max.
AEC3111E 8	21.03	23.83	12.01	10.16	2.39	33.73	15.44
AEC3111E 10	24.23	26.97	14.99	10.16	2.39	33.73	18.64
AEC3111E 12	26.59	29.36	19.05	10.16	2.39	33.73	21.79
AEC3111E 14	28.98	31.75	22.22	10.16	2.39	33.73	24.99
AEC3111E 16	31.34	34.14	25.40	10.16	2.39	33.73	28.19
AEC3111E 18	33.73	36.53	28.58	10.16	2.39	33.73	31.34
AEC3111E 20	36.91	39.67	31.75	13.59	2.92	38.89	34.54
AEC3111E 22	40.08	42.88	34.92	13.59	2.92	38.89	37.69
AEC3111E 24	43.18	46.02	38.10	14.17	2.92	40.49	40.89

Products may deviate from the listed description, specifications, technical data, dimensions and illustrations provided in this Connector Guide. Please contact Amerline to discuss your specific application to ensure that the desired products meet your specific requirements.

AEC3111F Cable Connecting Plug

Integral Cable Clamp with Grommet

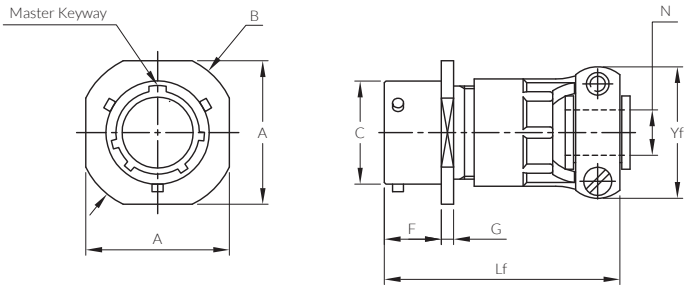

Unit : mm

Part No.	A max.	B ±0.51	C +0.03 -0.13	F +0.79 -0.00	G ±0.41	Lf Ref.	N ±0.25	Yf max.
AEC3111F 8	21.03	23.83	12.01	10.16	2.39	48.82	3.18	21.03
AEC3111F 10	24.23	26.97	14.99	10.16	2.39	48.82	4.78	22.63
AEC3111F 12	26.59	29.36	19.05	10.16	2.39	48.82	7.92	25.81
AEC3111F 14	28.98	31.75	22.22	10.16	2.39	48.82	9.53	28.98
AEC3111F 16	31.34	34.14	25.40	10.16	2.39	51.99	12.70	30.56
AEC3111F 18	33.73	36.53	28.58	10.16	2.39	52.78	15.88	37.31
AEC3111F 20	36.91	39.67	31.75	13.59	2.92	59.54	15.88	37.31
AEC3111F 22	40.08	42.88	34.92	13.59	2.92	59.54	19.05	42.06
AEC3111F 24	43.18	46.02	38.10	14.17	2.92	61.11	20.32	44.45

AEC3111P Cable Connecting Plug

Potting Seal

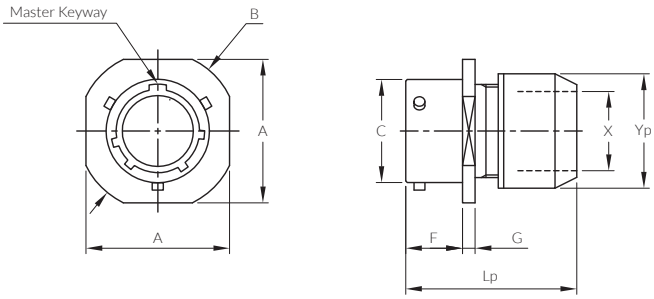

Unit : mm

Part No.	A max.	B ±0.51	C +0.03 -0.13	F +0.79 -0.00	G ±0.41	Lp Ref.	X min.	Yp max.
AEC3111P 8	21.03	23.83	12.01	10.16	2.39	36.91	8.05	15.44
AEC3111P 10	24.23	26.97	14.99	10.16	2.39	36.91	11.02	18.64
AEC3111P 12	26.59	29.36	19.05	10.16	2.39	36.91	13.92	21.79
AEC3111P 14	28.98	31.75	22.22	10.16	2.39	36.91	17.09	24.99
AEC3111P 16	31.34	34.14	25.40	10.16	2.39	36.91	20.27	28.19
AEC3111P 18	33.73	36.53	28.58	10.16	2.39	36.91	22.83	31.34
AEC3111P 20	36.91	39.67	31.75	13.59	2.92	42.47	26.01	34.54
AEC3111P 22	40.08	42.88	34.92	13.59	2.92	42.47	29.18	37.69
AEC3111P 24	43.18	46.02	38.10	14.17	2.92	44.04	32.36	40.89

Products may deviate from the listed description, specifications, technical data, dimensions and illustrations provided in this Connector Guide. Please contact Amerline to discuss your specific application to ensure that the desired products meet your specific requirements.

AEC3112E Box Mounting Receptacle

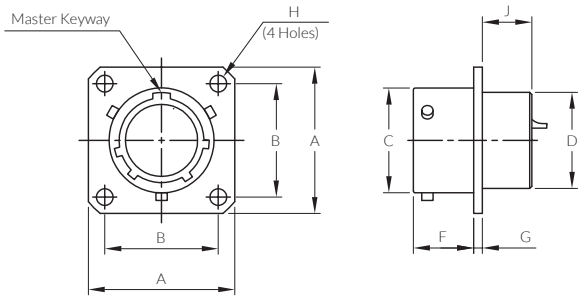

Unit : mm

Part No.	A max.	B ±0.13	C +0.03 -0.13	D +0.79 -0.00	F +0.79 -0.00	G ±0.41	H +0.25 -0.13	J max.
AEC3112E 8	21.03	15.09	12.01	11.12	10.95	1.57	3.05	8.99
AEC3112E 10	24.23	18.26	14.99	14.27	10.95	1.57	3.05	8.99
AEC3112E 12	26.59	20.62	19.05	17.48	10.95	1.57	3.05	8.99
AEC3112E 14	28.98	23.01	22.22	20.62	10.95	1.57	3.05	8.99
AEC3112E 16	31.34	24.61	25.40	23.83	10.95	1.57	3.05	8.99
AEC3112E 18	33.73	26.97	28.58	26.97	10.95	1.57	3.05	8.99
AEC3112E 20	36.91	29.36	31.75	30.18	14.12	2.39	3.05	10.59
AEC3112E 22	40.08	31.75	34.92	33.32	14.12	2.39	3.05	10.59
AEC3112E 24	43.18	34.93	38.10	36.53	14.96	2.39	3.73	11.30

AEC3112EP Box Mounting Receptacle for Rear Panel Mounting

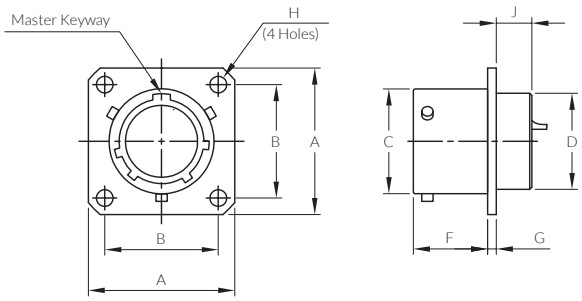

Unit : mm

Part No.	A max.	B ±0.13	C +0.03 -0.13	D +0.79 -0.00	F +0.79 -0.00	G ±0.41	H +0.25 -0.13	J max.
AEC3112EP 8	21.03	15.09	12.01	11.12	13.49	1.57	3.05	6.45
AEC3112EP 10	24.23	18.26	14.99	14.27	13.49	1.57	3.05	6.45
AEC3112EP 12	26.59	20.62	19.05	17.48	13.49	1.57	3.05	6.45
AEC3112EP 14	28.98	23.01	22.22	20.62	13.49	1.57	3.05	6.45
AEC3112EP 16	31.34	24.61	25.40	23.83	13.49	1.57	3.05	6.45
AEC3112EP 18	33.73	26.97	28.58	26.97	13.49	1.57	3.05	6.45
AEC3112EP 20	36.91	29.36	31.75	30.18	16.66	2.39	3.05	8.05
AEC3112EP 22	40.08	31.75	34.92	33.32	16.66	2.39	3.05	8.05
AEC3112EP 24	43.18	34.93	38.10	36.53	16.66	2.39	3.73	8.05

Products may deviate from the listed description, specifications, technical data, dimensions and illustrations provided in this Connector Guide. Please contact Amerline to discuss your specific application to ensure that the desired products meet your specific requirements.

AEC3112PC Box Mounting Receptacle with PCB Contacts

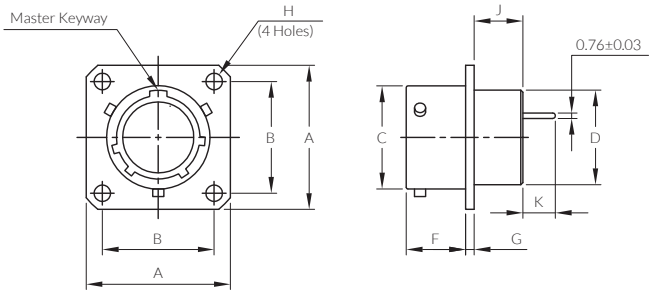

Unit : mm

Part No.	A max.	B ±0.13	C +0.03 -0.13	D +0.79 -0.41	F +0.79 -0.00	G ±0.41	H +0.25 -0.13	J max.	K ±0.50
AEC3112PC 8	21.03	15.09	12.01	11.12	10.95	1.57	3.05	8.99	9.50
AEC3112PC 10	24.23	18.26	14.99	14.27	10.95	1.57	3.05	8.99	9.50
AEC3112PC 12	26.59	20.62	19.05	17.48	10.95	1.57	3.05	8.99	9.50
AEC3112PC 14	28.98	23.01	22.22	20.62	10.95	1.57	3.05	8.99	9.50
AEC3112PC 16	31.34	24.61	25.40	23.83	10.95	1.57	3.05	8.99	9.50
AEC3112PC 18	33.73	26.97	28.58	26.97	10.95	1.57	3.05	8.99	9.50
AEC3112PC 20	36.91	29.36	31.75	30.18	14.12	2.39	3.05	10.59	8.50
AEC3112PC 22	40.08	31.75	34.92	33.32	14.12	2.39	3.05	10.59	8.50
AEC3112PC 24	43.18	34.93	38.10	36.53	14.96	2.39	3.73	11.30	8.50

AEC3114PC Jam Nut Receptacle with PCB Contacts

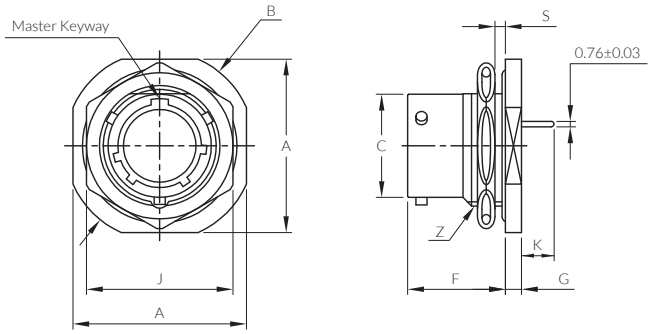

Unit : mm

Part No.	A max.	B +0.00 -0.81	C +0.03 -0.13	F +0.79 -0.00	G ±0.51	J ±0.43	K ±0.50	S Panel thick min / max	Z Thread Class 2A
AEC3114PC 8	24.23	27.38	12.01	17.55	2.97	19.05	9.50	1.57 / 3.18	9/16-24 UNEF
AEC3114PC 10	27.38	30.56	14.99	17.55	2.97	22.23	9.50	1.57 / 3.18	11/16-24 UNEF
AEC3114PC 12	32.16	35.33	19.05	17.55	2.97	26.97	9.50	1.57 / 3.18	7/8-20 UNEF
AEC3114PC 14	35.33	38.51	22.22	17.55	2.97	30.18	9.50	1.57 / 3.18	1-20 UNEF
AEC3114PC 16	38.51	41.68	25.40	17.55	2.97	33.32	9.50	1.57 / 3.18	1 1/8-18 UNEF
AEC3114PC 18	41.68	44.86	28.58	17.55	2.97	36.53	9.50	1.57 / 3.18	1 1/4-18 UNEF
AEC3114PC 20	46.43	49.63	31.75	22.33	3.76	39.67	8.50	1.57 / 6.35	1 3/8-18 UNEF
AEC3114PC 22	49.63	52.78	34.92	22.33	3.76	42.88	8.50	1.57 / 6.35	1 1/2-18 UNEF
AEC3114PC 24	52.78	55.96	38.10	23.16	3.76	46.02	8.50	1.57 / 6.35	1 5/8-18 UNEF

Products may deviate from the listed description, specifications, technical data, dimensions and illustrations provided in this Connector Guide. Please contact Amerline to discuss your specific application to ensure that the desired products meet your specific requirements.

AEC3114A Jam Nut Receptacle

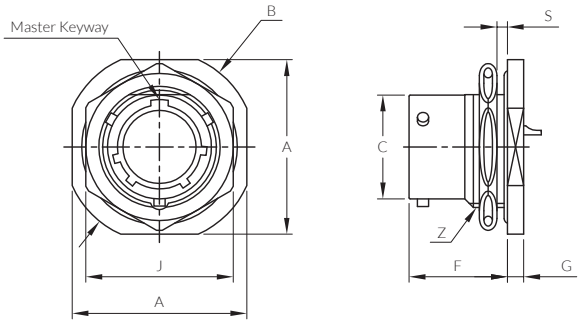

Unit : mm

Part No.	A max.	B +0.00 -0.81	C +0.03 -0.13	F +0.79 -0.00	G ±0.51	J ±0.43	S Panel thick min / max	Z Thread Class 2A
AEC3114A 8	24.23	27.38	12.01	17.55	2.97	19.05	1.57 / 3.18	9/16-24 UNEF
AEC3114A 10	27.38	30.56	14.99	17.55	2.97	22.23	1.57 / 3.18	11/16-24 UNEF
AEC3114A 12	32.16	35.33	19.05	17.55	2.97	26.97	1.57 / 3.18	7/8-20 UNEF
AEC3114A 14	35.33	38.51	22.22	17.55	2.97	30.18	1.57 / 3.18	1-20 UNEF
AEC3114A 16	38.51	41.68	25.40	17.55	2.97	33.32	1.57 / 3.18	1 1/8-18 UNEF
AEC3114A 18	41.68	44.86	28.58	17.55	2.97	36.53	1.57 / 3.18	1 1/4-18 UNEF
AEC3114A 20	46.43	49.63	31.75	22.33	3.76	39.67	1.57 / 6.35	1 3/8-18 UNEF
AEC3114A 22	49.63	52.78	34.92	22.33	3.76	42.88	1.57 / 6.35	1 1/2-18 UNEF
AEC3114A 24	52.78	55.96	38.10	23.16	3.76	46.02	1.57 / 6.35	1 5/8-18 UNEF

AEC3114E Jam Nut Receptacle

Grommet & Pressure Nut

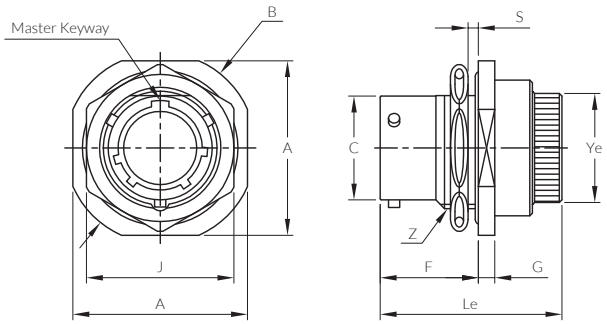

Unit : mm

Part No.	A max.	B +0.00 -0.81	C +0.03 -0.13	F +0.79 -0.00	G ±0.51	J ±0.43	Le max.	S Panel thick min / max	Ye max.	Z Thread Class 2A
AEC3114E 8	24.23	27.38	12.01	17.55	2.97	19.05	34.14	1.57 / 3.18	19.05	9/16-24 UNEF
AEC3114E 10	27.38	30.56	14.99	17.55	2.97	22.23	34.14	1.57 / 3.18	22.23	11/16-24 UNEF
AEC3114E 12	32.16	35.33	19.05	17.55	2.97	26.97	34.14	1.57 / 3.18	25.40	7/8-20 UNEF
AEC3114E 14	35.33	38.51	22.22	17.55	2.97	30.18	34.14	1.57 / 3.18	28.58	1-20 UNEF
AEC3114E 16	38.51	41.68	25.40	17.55	2.97	33.32	34.14	1.57 / 3.18	31.75	1 1/8-18 UNEF
AEC3114E 18	41.68	44.86	28.58	17.55	2.97	36.53	34.14	1.57 / 3.18	33.93	1 1/4-18 UNEF
AEC3114E 20	46.43	49.63	31.75	22.33	3.76	39.67	40.49	1.57 / 6.35	38.89	1 3/8-18 UNEF
AEC3114E 22	49.63	52.78	34.92	22.33	3.76	42.88	40.49	1.57 / 6.35	42.06	1 1/2-18 UNEF
AEC3114E 24	52.78	55.96	38.10	23.16	3.76	46.02	41.68	1.57 / 6.35	45.24	1 5/8-18 UNEF

Products may deviate from the listed description, specifications, technical data, dimensions and illustrations provided in this Connector Guide. Please contact Amerline to discuss your specific application to ensure that the desired products meet your specific requirements.

AEC3114F Jam Nut Receptacle

Integral Cable Clamp with Grommet

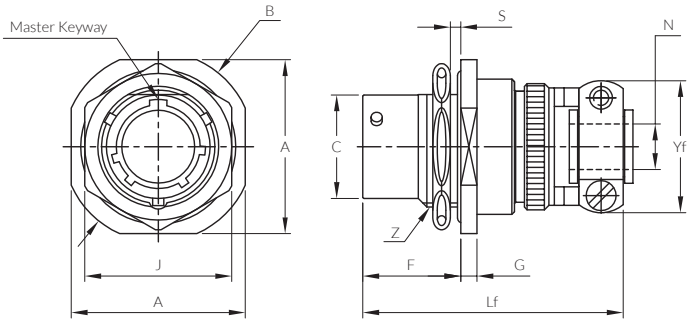

Unit : mm

Part No.	A max.	B +0.00 -0.81	C +0.03 -0.13	F +0.79 -0.00	G ±0.51	J ±0.43	Lf max.	N ±0.25	S Panel thick min / max	Yf max.	Z Thread Class 2A
AEC3114F 8	24.23	27.38	12.01	17.55	2.97	19.05	48.41	3.18	1.57 / 3.18	21.03	9/16-24 UNEF
AEC3114F 10	27.38	30.56	14.99	17.55	2.97	22.23	48.41	4.78	1.57 / 3.18	22.63	11/16-24 UNEF
AEC3114F 12	32.16	35.33	19.05	17.55	2.97	26.97	48.41	7.92	1.57 / 3.18	25.81	7/8-20 UNEF
AEC3114F 14	35.33	38.51	22.22	17.55	2.97	30.18	48.41	9.53	1.57 / 3.18	28.98	1-20 UNEF
AEC3114F 16	38.51	41.68	25.40	17.55	2.97	33.32	51.99	12.70	1.57 / 3.18	30.56	1 1/8-18 UNEF
AEC3114F 18	41.68	44.86	28.58	17.55	2.97	36.53	52.78	15.88	1.57 / 3.18	37.31	1 1/4-18 UNEF
AEC3114F 20	46.43	49.63	31.75	22.33	3.76	39.67	59.13	15.88	1.57 / 6.35	37.31	1 3/8-18 UNEF
AEC3114F 22	49.63	52.78	34.92	22.33	3.76	42.88	59.13	19.05	1.57 / 6.35	42.06	1 1/2-18 UNEF
AEC3114F 24	52.78	55.96	38.10	23.16	3.76	46.02	62.31	20.32	1.57 / 6.35	44.45	1 5/8-18 UNEF

AEC3114P Jam Nut Receptacle

Potting Seal

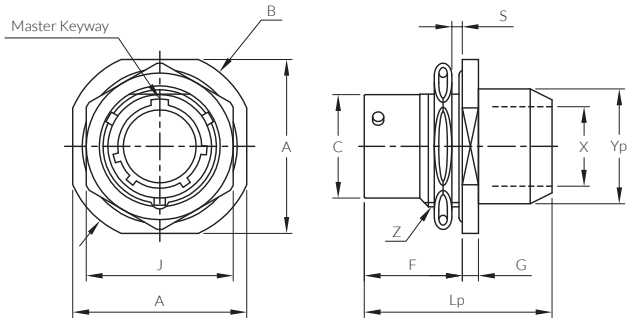

Unit : mm

Part No.	A max.	B +0.00 -0.81	C +0.03 -0.13	F +0.79 -0.00	G ±0.51	J ±0.43	Lp max.	S Panel thick min / max	X min.	Yp max.	Z Thread Class 2A
AEC3114E 8	24.23	27.38	12.01	17.55	2.97	19.05	35.33	1.57 / 3.18	8.05	15.44	9/16-24 UNEF
AEC3114E 10	27.38	30.56	14.99	17.55	2.97	22.23	35.33	1.57 / 3.18	11.02	18.64	11/16-24 UNEF
AEC3114E 12	32.16	35.33	19.05	17.55	2.97	26.97	35.33	1.57 / 3.18	13.92	21.79	7/8-20 UNEF
AEC3114E 14	35.33	38.51	22.22	17.55	2.97	30.18	35.33	1.57 / 3.18	17.09	24.99	1-20 UNEF
AEC3114E 16	38.51	41.68	25.40	17.55	2.97	33.32	35.33	1.57 / 3.18	20.27	28.19	1 1/8-18 UNEF
AEC3114E 18	41.68	44.86	28.58	17.55	2.97	36.53	35.33	1.57 / 3.18	22.83	31.34	1 1/4-18 UNEF
AEC3114E 20	46.43	49.63	31.75	22.33	3.76	39.67	41.68	1.57 / 6.35	26.01	34.54	1 3/8-18 UNEF
AEC3114E 22	49.63	52.78	34.92	22.33	3.76	42.88	41.68	1.57 / 6.35	29.18	37.69	1 1/2-18 UNEF
AEC3114E 24	52.78	55.96	38.10	23.16	3.76	46.02	43.26	1.57 / 6.35	32.36	40.89	1 5/8-18 UNEF

Products may deviate from the listed description, specifications, technical data, dimensions and illustrations provided in this Connector Guide. Please contact Amerline to discuss your specific application to ensure that the desired products meet your specific requirements.

AEC3116A Straight Plug

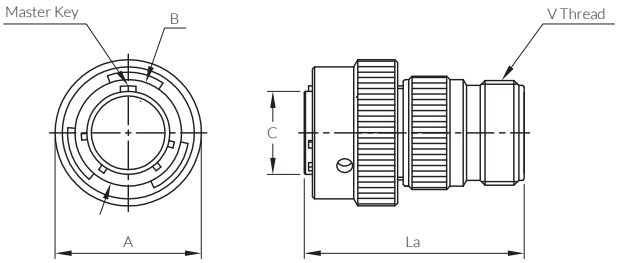

Unit : mm

Part No.	A max.	B +0.13 -0.03	C ±0.25	La Ref.	V Thread Class 2A
AEC3116A 8	19.86	12.22	8.80	36.68	1/2-28 UNEF
AEC3116A 10	23.52	15.29	12.00	36.68	5/8-24 UNEF
AEC3116A 12	26.49	19.33	15.00	36.68	3/4-20UNEF
AEC3116A 14	30.05	22.48	18.10	36.68	7/8-20 UNEF
AEC3116A 16	33.15	25.65	21.30	36.68	1-20 UNEF
AEC3116A 18	35.33	28.85	23.85	36.68	1 3/16-18 UNEF
AEC3116A 20	38.89	32.00	27.03	43.89	1 3/16-18 UNEF
AEC3116A 22	42.06	35.18	30.20	43.89	1 7/16-18 UNEF
AEC3116A 24	45.13	38.35	33.38	44.15	1 7/16-18 UNEF

AEC3116E Straight Plug

Grommet & Pressure Nut

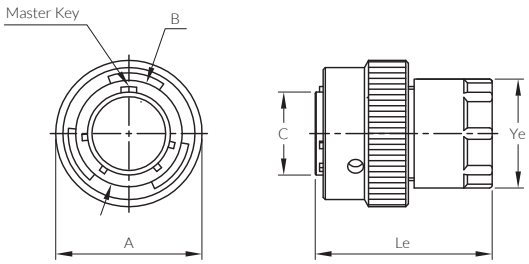

Unit : mm

Part No.	A max.	B +0.13 -0.03	C ±0.25	Le Ref.	Ye max.
AEC3116E 8	19.86	12.22	8.80	33.73	15.44
AEC3116E 10	23.52	15.29	12.00	33.73	18.64
AEC3116E 12	26.49	19.33	15.00	33.73	21.79
AEC3116E 14	30.05	22.48	18.10	33.73	24.99
AEC3116E 16	33.15	25.65	21.30	33.73	28.19
AEC3116E 18	35.33	28.85	23.85	33.73	31.34
AEC3116E 20	38.89	32.00	27.03	36.91	34.54
AEC3116E 22	42.06	35.18	30.20	36.91	37.69
AEC3116E 24	45.13	38.35	33.38	38.35	40.89

Products may deviate from the listed description, specifications, technical data, dimensions and illustrations provided in this Connector Guide. Please contact Amerline to discuss your specific application to ensure that the desired products meet your specific requirements.

AEC3116F Straight Plug

Integral Cable Clamp with Grommet

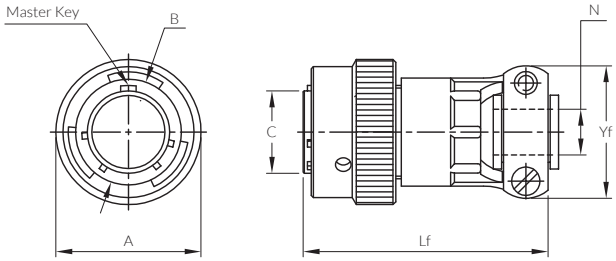

Unit : mm

Part No.	A max.	B +0.13 -0.03	C +0.03 -0.13	Lf Ref.	N ±0.25	Yf max.
AEC3116F 8	19.86	12.22	8.80	48.41	3.18	21.03
AEC3116F 10	23.52	15.29	12.00	48.41	4.78	22.63
AEC3116F 12	26.49	19.33	15.00	48.41	7.92	25.81
AEC3116F 14	30.05	22.48	18.10	48.41	9.53	28.98
AEC3116F 16	33.15	25.65	21.30	51.99	12.70	30.56
AEC3116F 18	35.33	28.85	23.85	55.32	15.88	37.31
AEC3116F 20	38.89	32.00	27.03	57.15	15.88	37.31
AEC3116F 22	42.06	35.18	30.20	57.15	19.05	42.06
AEC3116F 24	45.13	38.35	33.38	58.72	20.32	44.45

AEC3116P Straight Plug

Potting Seal

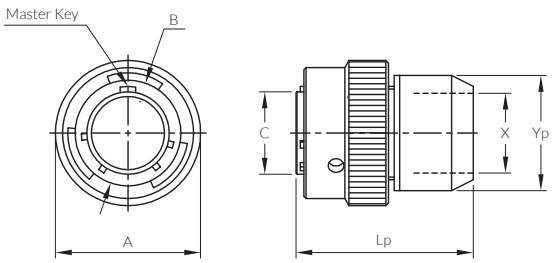

Unit : mm

Part No.	A max.	B +0.13 -0.03	C ±0.25	Lp Ref.	X min.	Yp max.
AEC3116P 8	19.86	12.22	8.80	38.10	8.05	15.44
AEC3116P 10	23.52	15.29	12.00	38.10	11.02	18.64
AEC3116P 12	26.49	19.33	15.00	38.10	13.92	21.79
AEC3116P 14	30.05	22.48	18.10	38.10	17.09	24.99
AEC3116P 16	33.15	25.65	21.30	38.10	20.27	28.19
AEC3116P 18	35.33	28.85	23.85	38.10	22.83	31.34
AEC3116P 20	38.89	32.00	27.03	40.87	26.01	34.54
AEC3116P 22	42.06	35.18	30.20	40.87	29.18	37.69
AEC3116P 24	45.13	38.35	33.38	42.85	32.36	40.89

Products may deviate from the listed description, specifications, technical data, dimensions and illustrations provided in this Connector Guide. Please contact Amerline to discuss your specific application to ensure that the desired products meet your specific requirements.

AEC3115 Dummy Stowage Receptacle

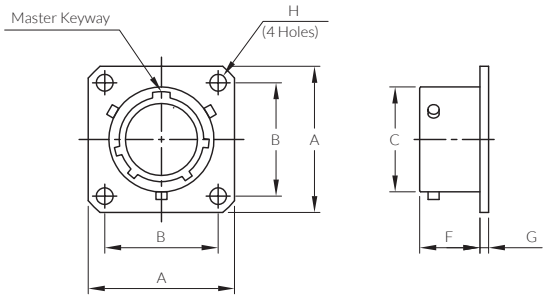

Unit : mm

Part No.	A max.	B +0.13	C +0.03 -0.13	F +0.79 -0.00	G ±0.41	H +0.25 -0.13
AEC3115 8	21.03	15.09	12.01	11.73	1.57	3.05
AEC3115 10	24.23	18.26	14.99	11.73	1.57	3.05
AEC3115 12	26.59	20.62	19.05	11.73	1.57	3.05
AEC3115 14	28.98	23.01	22.22	11.73	1.57	3.05
AEC3115 16	31.34	24.61	25.40	11.73	1.57	3.05
AEC3115 18	33.73	26.97	28.58	11.73	1.57	3.05
AEC3115 20	36.91	29.36	31.75	14.12	2.39	3.05
AEC3115 22	40.08	31.75	34.92	14.12	2.39	3.05
AEC3115 24	43.18	34.93	38.10	14.96	2.39	3.73

AEC3119E Thru-Bulkhead Receptacle

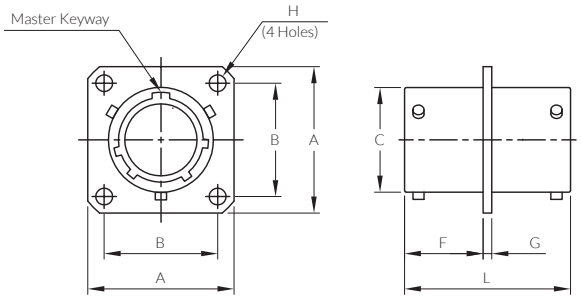

Unit : mm

Part No.	A max.	B ±0.13	C +0.03 -0.13	F +0.79 -0.00	G ±0.41	H +0.25 -0.13	L Ref.
AEC3119E 8	21.03	15.09	12.01	14.27	1.57	3.05	28.58
AEC3119E 10	24.23	18.26	14.99	14.27	1.57	3.05	28.58
AEC3119E 12	26.59	20.62	19.05	14.27	1.57	3.05	28.58
AEC3119E 14	28.98	23.01	22.22	14.27	1.57	3.05	28.58
AEC3119E 16	31.34	24.61	25.40	14.27	1.57	3.05	28.58
AEC3119E 18	33.73	26.97	28.58	14.27	1.57	3.05	28.58
AEC3119E 20	36.91	29.36	31.75	17.48	2.39	3.05	35.71
AEC3119E 22	40.08	31.75	34.92	17.48	2.39	3.05	35.71
AEC3119E 24	43.18	34.93	38.10	17.48	2.39	3.73	35.71

Products may deviate from the listed description, specifications, technical data, dimensions and illustrations provided in this Connector Guide. Please contact Amerline to discuss your specific application to ensure that the desired products meet your specific requirements.

AEC3181 Protective Cover for Receptacle

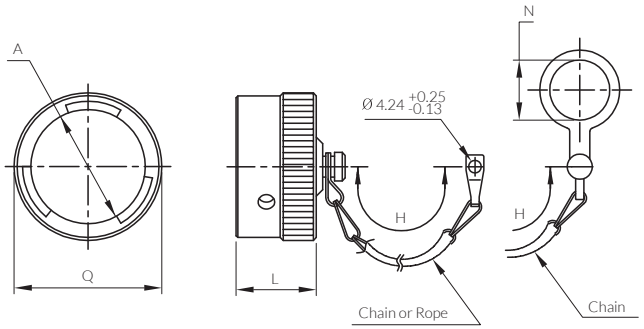

Unit : mm

Part No.	Dash no. (with Chain)	Dash no. (with Chain and Ring)	Dash no. (with Rope)	A +0.13 -0.03	H +12.70 -6.35	L max.	N min.	Q max.
AEC3181-*	8C	8N	8R	12.22	76.20	14.27	14.68	19.86
AEC3181-*	10C	10N	10R	15.29	76.20	14.27	17.86	23.52
AEC3181-*	12C	12N	12R	19.33	88.90	14.27	22.63	26.49
AEC3181-*	14C	14N	14R	22.48	88.90	14.27	25.81	30.05
AEC3181-*	16C	16N	16R	25.65	88.90	14.27	28.98	33.15
AEC3181-*	18C	18N	18R	28.85	88.90	14.27	32.16	35.33
AEC3181-*	20C	20N	20R	32.00	101.60	14.27	35.33	38.89
AEC3181-*	22C	22N	22R	35.18	101.60	14.27	38.51	42.06
AEC3181-*	24C	24N	24R	38.35	101.60	15.29	41.68	45.13

NOTE : Chain(1) - Amerline standard (material - copper alloy)
Chain(2) - Available option (material - stainless steel)

AEC3180 Protective Cover for Plug

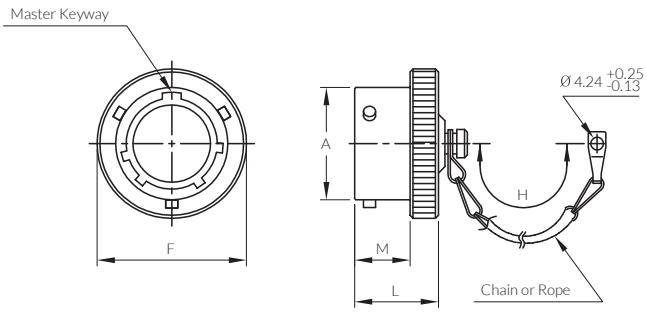

Unit : mm

Part No.	Dash no. (with Chain)	Dash no. (with Rope)	A +0.13 -0.03	F max.	H +12.70 -6.35	L max.	M +0.25 -0.00
AEC3180-*	8C	8R	12.01	18.26	76.20	14.27	9.35
AEC3180-*	10C	10R	14.99	21.44	76.20	14.27	9.35
AEC3180-*	12C	12R	19.05	25.40	88.90	14.27	9.35
AEC3180-*	14C	14R	22.22	28.58	88.90	14.27	9.35
AEC3180-*	16C	16R	25.40	31.75	88.90	14.27	9.35
AEC3180-*	18C	18R	28.58	34.92	88.90	14.27	9.35
AEC3180-*	20C	20R	31.75	38.10	101.60	15.88	10.92
AEC3180-*	22C	22R	34.92	41.28	101.60	15.88	10.92
AEC3180-*	24C	24R	38.10	44.45	101.60	16.71	11.76

NOTE : Chain(1) - Amerline standard (material - copper alloy)
Chain(2) - Available option (material - stainless steel)

Products may deviate from the listed description, specifications, technical data, dimensions and illustrations provided in this Connector Guide. Please contact Amerline to discuss your specific application to ensure that the desired products meet your specific requirements.

AEC 5015 Series

AEC 26482 Series

AEC 95234 Series

POWER YOUR APPLICATIONS WITH

CIRCULAR CONNECTORS YOU CAN DEPEND ON

Since 1980, Amerline has provided customers with circular connector solutions to power their specific applications. Over the years, we've expanded our product lines and services to meet market demands, while maintaining a commitment to top quality, competitive pricing and world class lead times. These efforts have made us a market leader in the circular connector industry and established a foundation to continue innovating for the future.

Amerline®
ENTERPRISES COMPANY

www.amerline.com

This Connector Guide is intended to provide general information about various products. Information contained herein is for general reference only and subject to change without notice. Products may deviate from the listed description, specifications, technical data, dimensions and illustrations provided in this Connector Guide. Please contact Amerline to discuss your specific application to ensure that the desired products meet your specific requirements. No information or data contained in this Connector Guide shall be construed to create any liability on the part of Amerline.